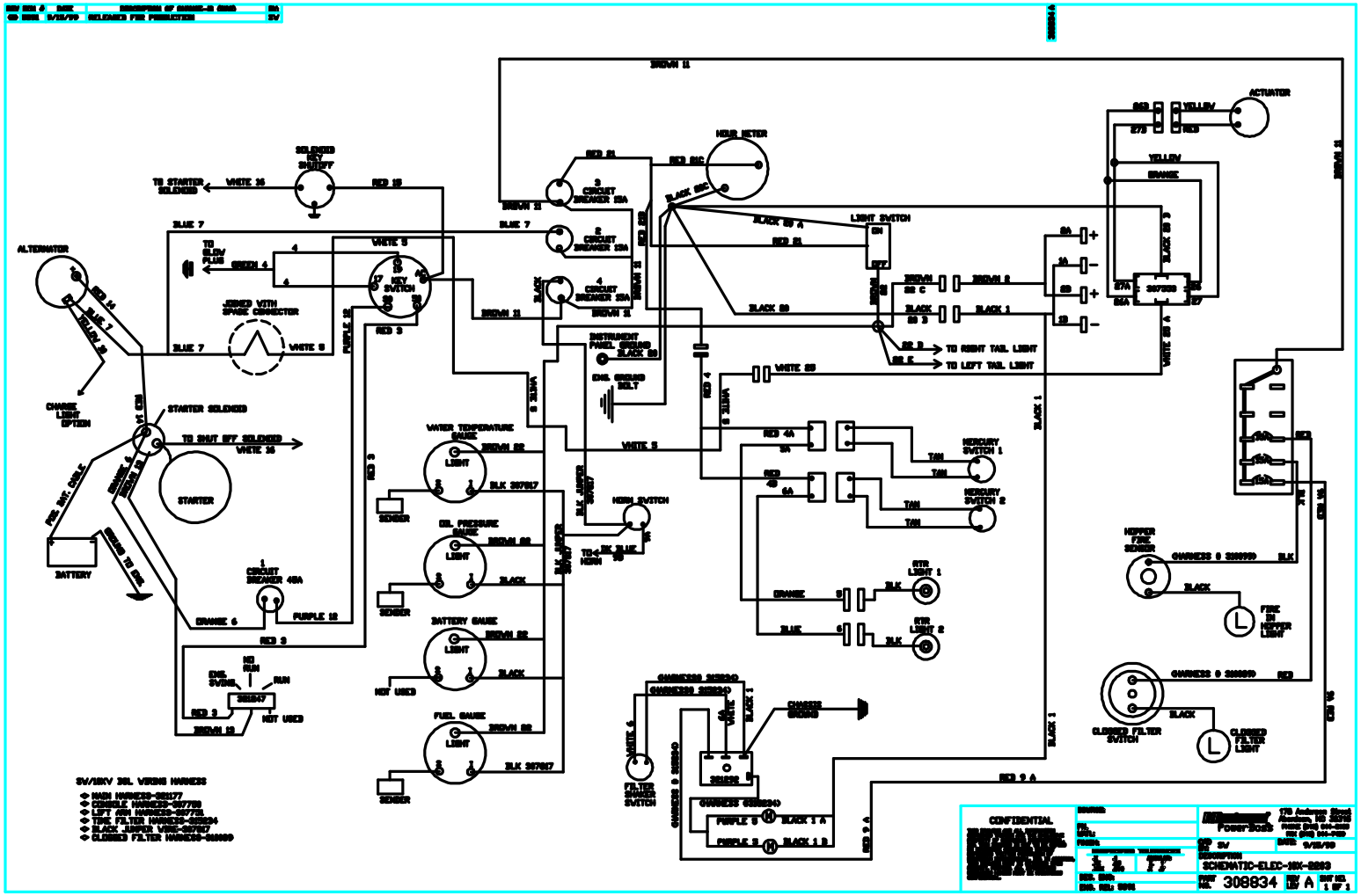
ALTERNATOR
BATTERY
CHARGE LIGHT OPTION
STARTER SOLENOID
STARTER
SOLENOID DIV SHUTOFF
TO STARTER SOLENOID
TO SHUT OFF SOLENOID
TO GLOW PLUG
JOINED WITH SPACE CONNECTOR
KEY SWITCH
CIRCUIT BREAKER 40A
ENG. SVENS
NO RUN
RUN
NOT USED
HOUR METER
CIRCUIT BREAKER 20A
INSTRUMENT PANEL GROUND
ENG. GROUND BOLT
WATER TEMPERATURE GAUGE
OIL PRESSURE GAUGE
BATTERY GAUGE
FUEL GAUGE
LIGHT
SENDER
HORN SWITCH
TO HORN
LIGHT SWITCH
TO RIGHT TAIL LIGHT
TO LEFT TAIL LIGHT
MERCURY SWITCH 1
MERCURY SWITCH 2
RTR LIGHT 1
RTR LIGHT 2
ACTUATOR
HOPPER FIRE SENSOR
FIRE IN HOPPER LIGHT
CLOSED FILTER SWITCH
CLOSED FILTER LIGHT
FILTER SENSOR SWITCH
CHARGE GROUND
5V/10KV 35L WRING HARNESS
◆ MAIN HARNESS-308177
◆ CONSOLE HARNESS-307769
◆ LEFT ARM HARNESS-307768
◆ TOP FILTER HARNESS-308824
◆ BLACK JUMPER WIRE-307817
◆ CLOSED FILTER HARNESS-308809
CONFIDENTIAL
Power-Scale
SCHEMATIC-ELEC-10K-5V
308834
REV A
1 OF 1